Optik Track Lights

Technical Data Sheet

ITEM SKU#: 662187508542

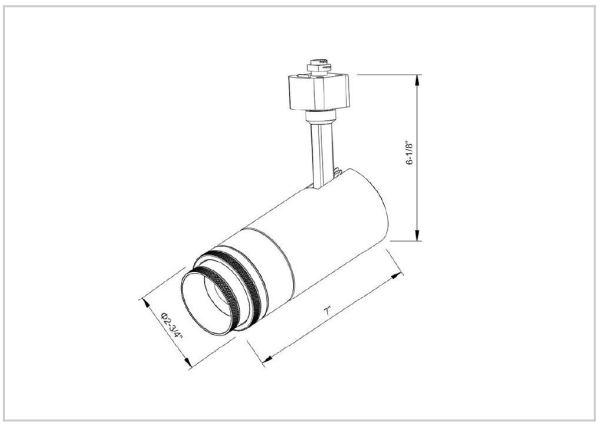

COB LED

DIMMABLE

IP20

Product Code : IK-ROPTIKTL-15W-30/40/50K-WH-90C-ADB

Voltage	100 - 277 V AC, 50-60 Hz
Lumen Output	1359lm
Power	15W
Efficacy	90lm/w
CCT Selectable(K)	3000- 4000- 5000K
CRI	>90
Beam Angle	15°
Light Distribution	Wide flood
LED Type	COB
LED Light Source	Osram SOLERIQ S 19
Start Time	Instant
Driver	Built in
Operating Position	Swiveling Type
Dimming	Triac Dimming
Construction	Track
Mounting Type	Track Light Structure
Heads	Single Head
Body Material	Aluminium Die cast
Finish	White
Length	6-1/4"
Height	6-3/4"
Diameter	2-1/2"
Application Area	Indoor Applications

Beam Spread (Options)

Spot 15°		Medium 24°		Flood 36°		Wide Flood 60°	
ft	Ø	ft	Ø	ft	Ø	ft	Ø
3.0	0.72	3.0	1.41	3.0	2.03	3.0	3.15
9.0	2.15	9.0	4.22	9.0	6.09	9.0	9.45
15.0	3.58	15.0	7.04	15.0	10.15	15.0	15.75

Technical Data

IES File Link

Installation Instructions Link

© IKIO LED LIGHTING 2025. All Rights Reserved. Products and technologies in this document may be covered by one or more Patents Pending.

The product images shown are for illustration purposes only and may not be an exact representation of the product. Specifications subject to change without notice.